GENERAL NOTES (UNLESS OTHERWISE SPECIFIED)

REVISIONS						
REV	ECN	DESCRIPTION OF CHANGE	DRAWN	CHKD	APVD	DATE

Sensor Terminals

Sensor Types:

CMF010
CMF025
CMF050
CMF100
CMF200
CMF300
CMF400

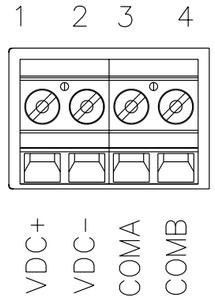

CUSTOMER SUPPLIED CABLE
MAXIMUM LENGTH:
1000 ft (300m) OF 18 AWG(0.8 mm^2)
300 ft (100m) OF 22 AWG(0.35 mm^2)

Transmitter:

3700
IS TERMINAL
(BLUE)

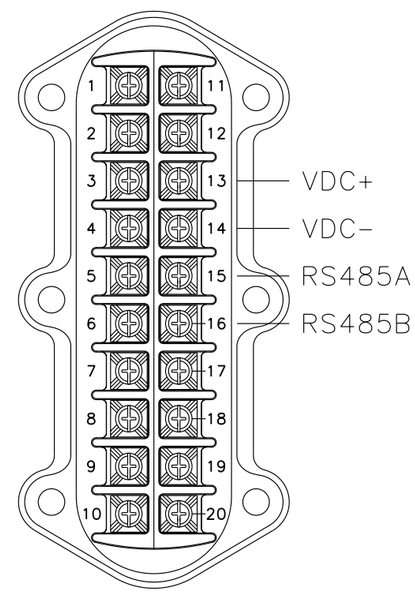

ITEM	DESCRIPTION	PART OR REF. NO.	MATL. OR MFGR	QTY.

MICRO MOTION, INC.
BOULDER, COLORADO

WIRING, ENHANCED CORE
TO 3700

THIRD ANGLE PROJECTION

	NAME	DATE
DRAWN	WJB	4/27/06
CHKD.	SAD	5/19/06
APVD.	ER	5/19/06

SIZE	DWG. NO.	REV.
D	20006810	A

SCALE NONE | DO NOT SCALE DRAWING | SHEET 1 OF 1

COPYRIGHT 2006 MICRO MOTION, INC.
ALL RIGHTS RESERVED